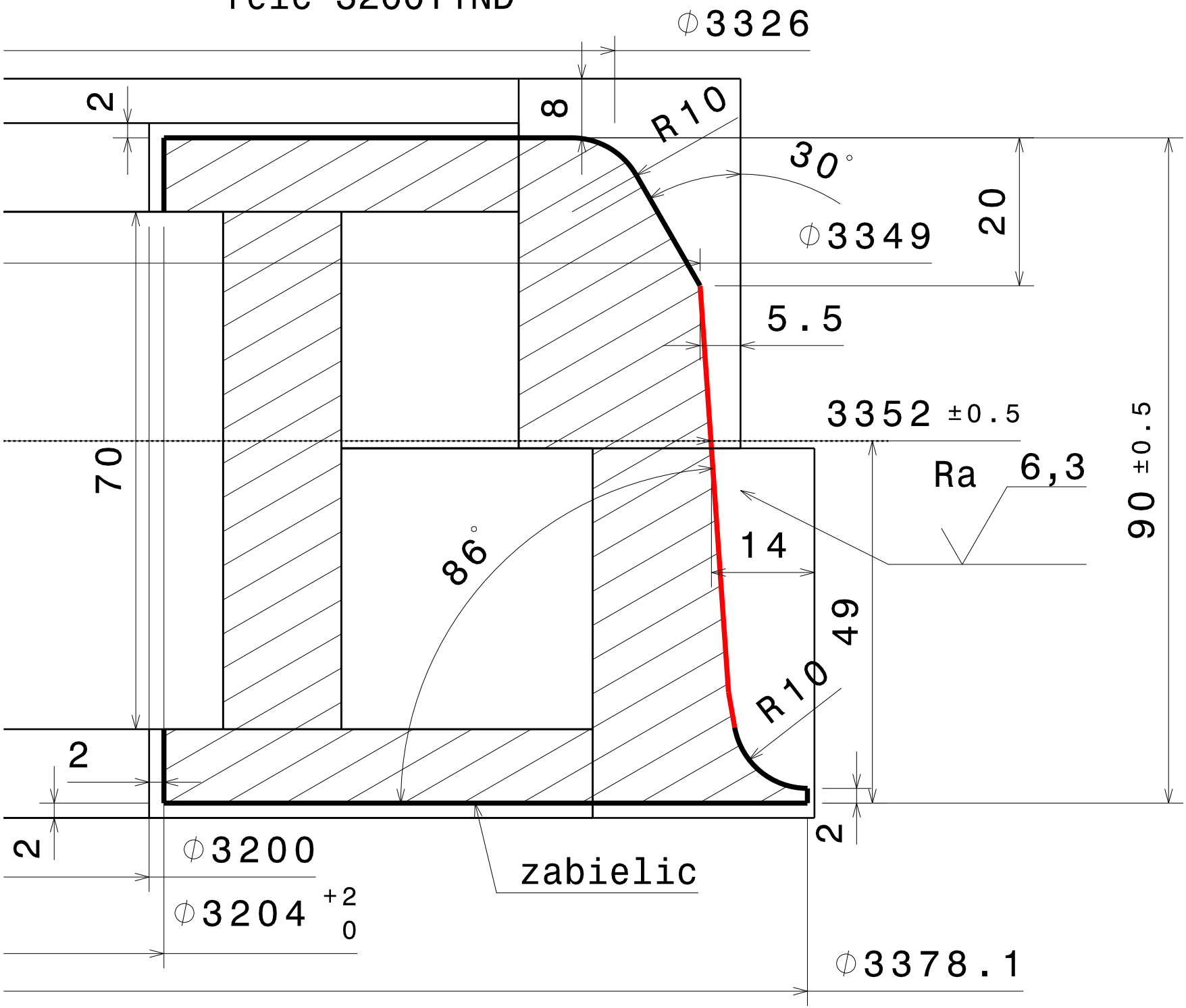felc 3200T1ND