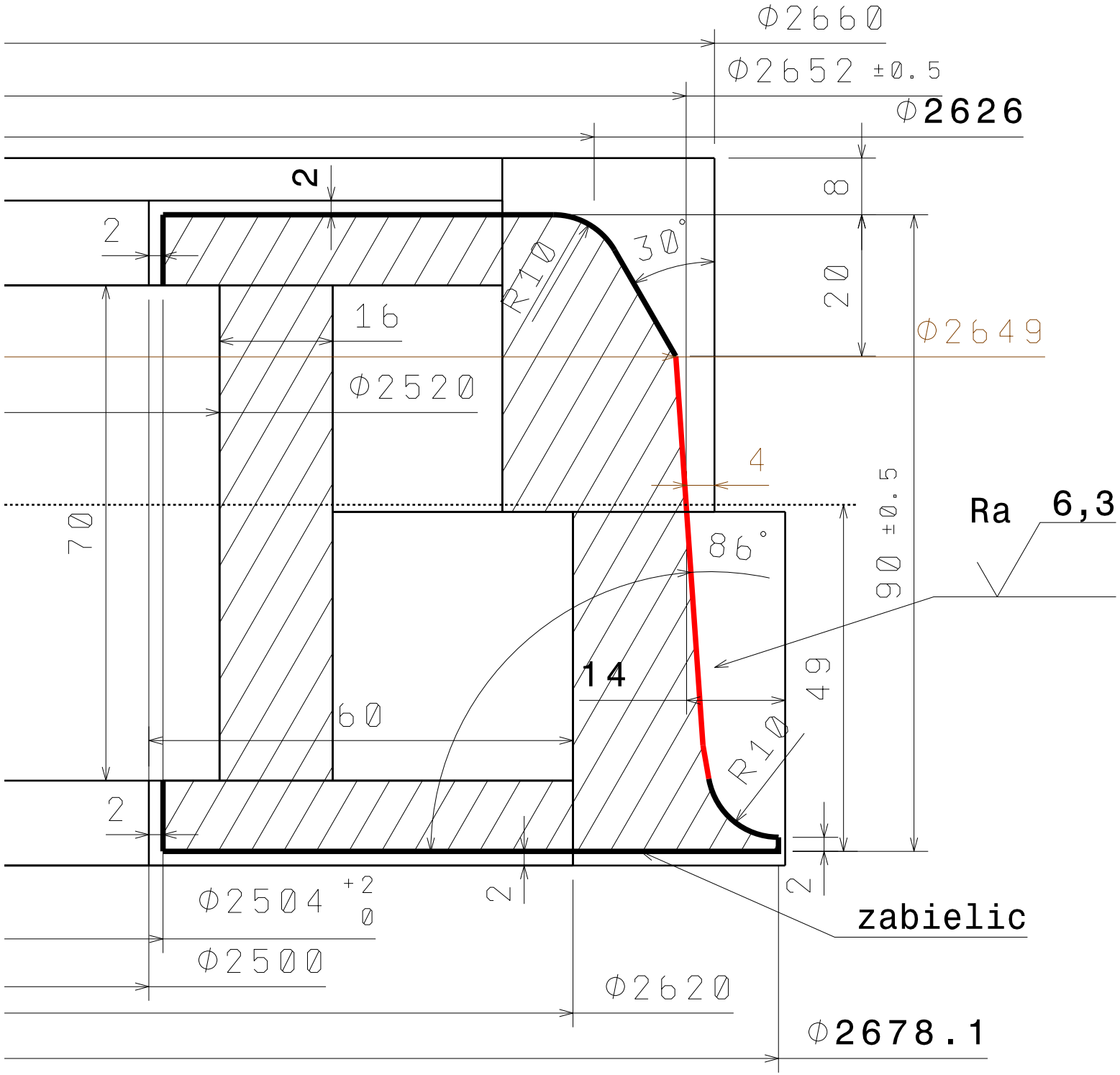felc 2500T1ND